REAR SPLASH GUARDS

RAM

www.mopar.com

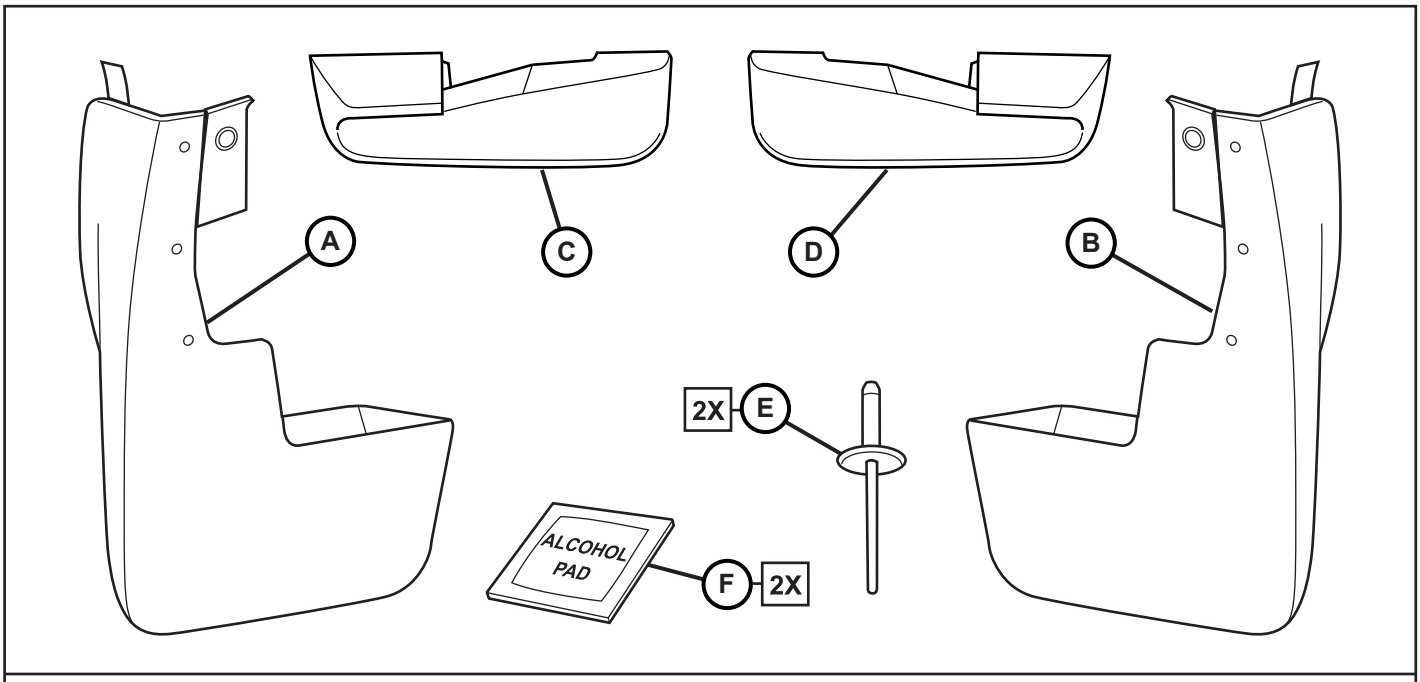

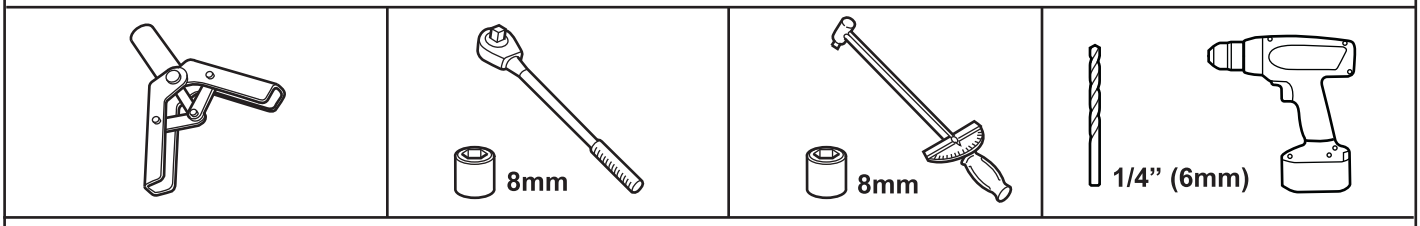

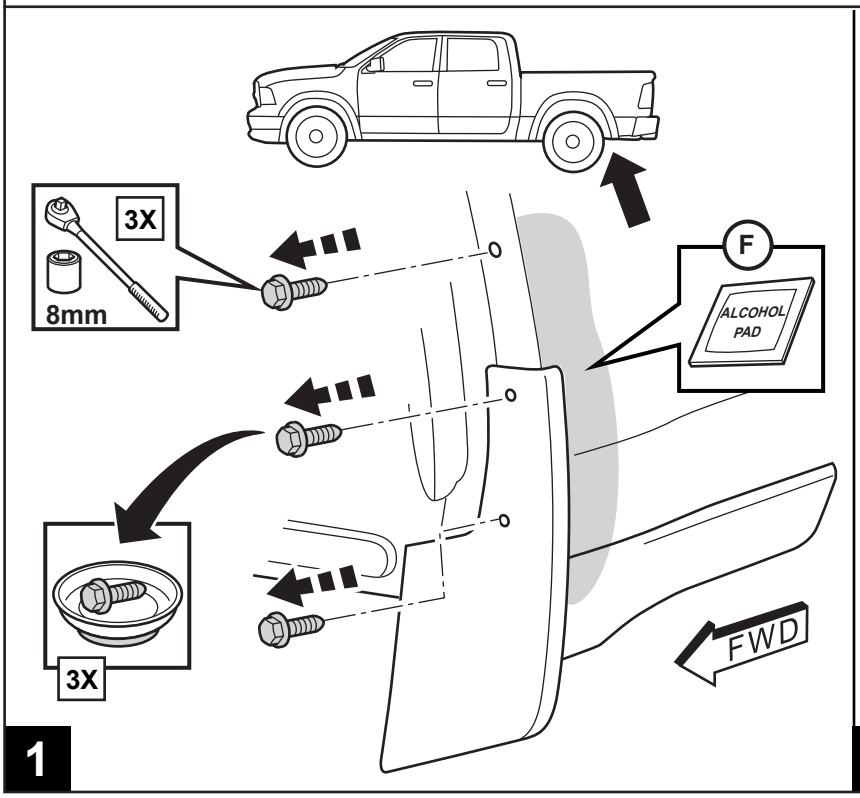

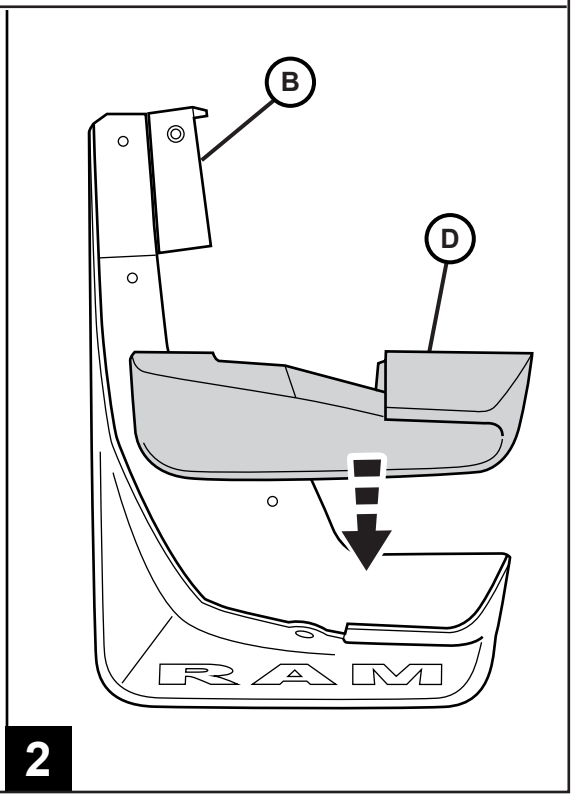

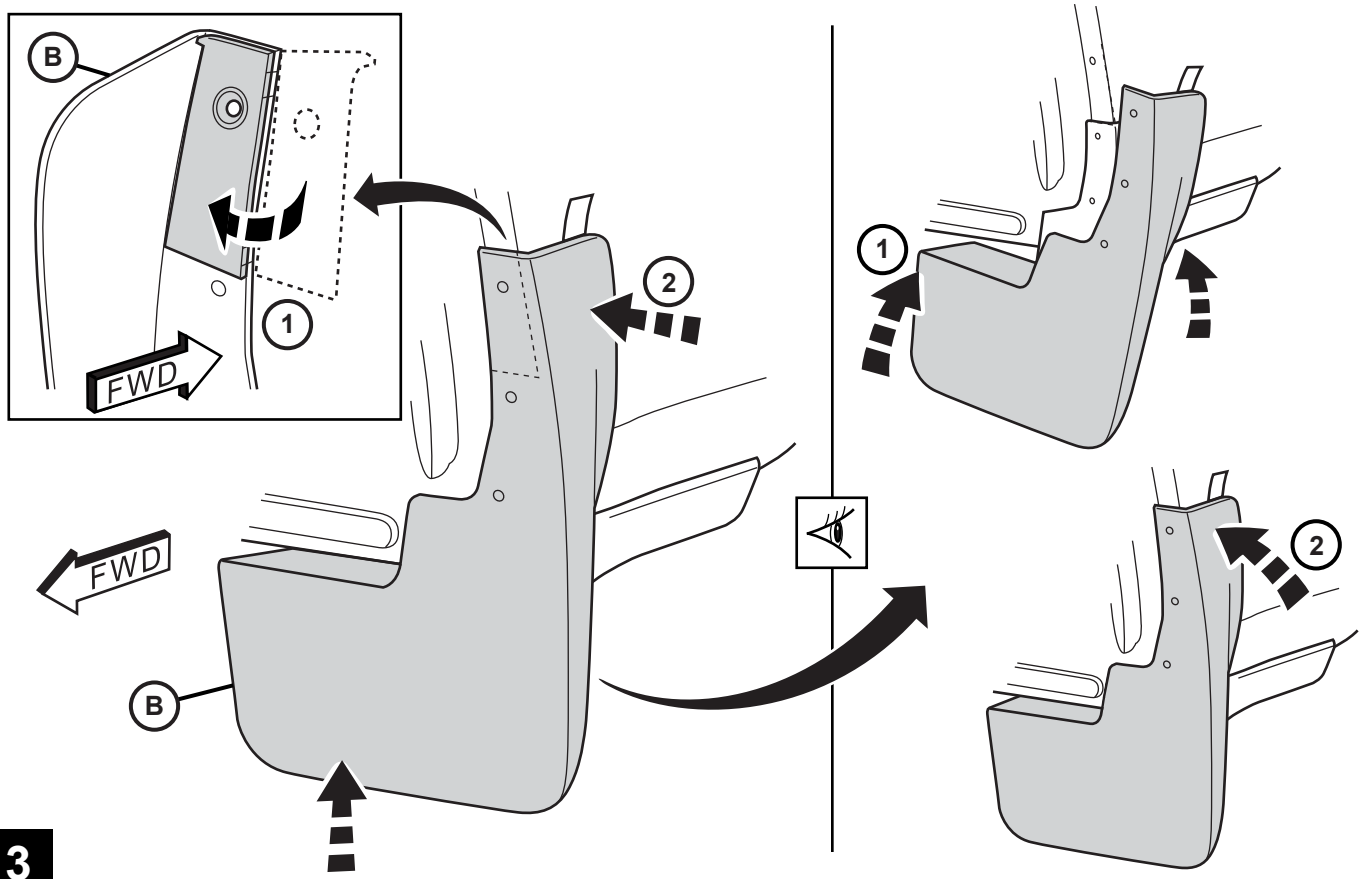

3

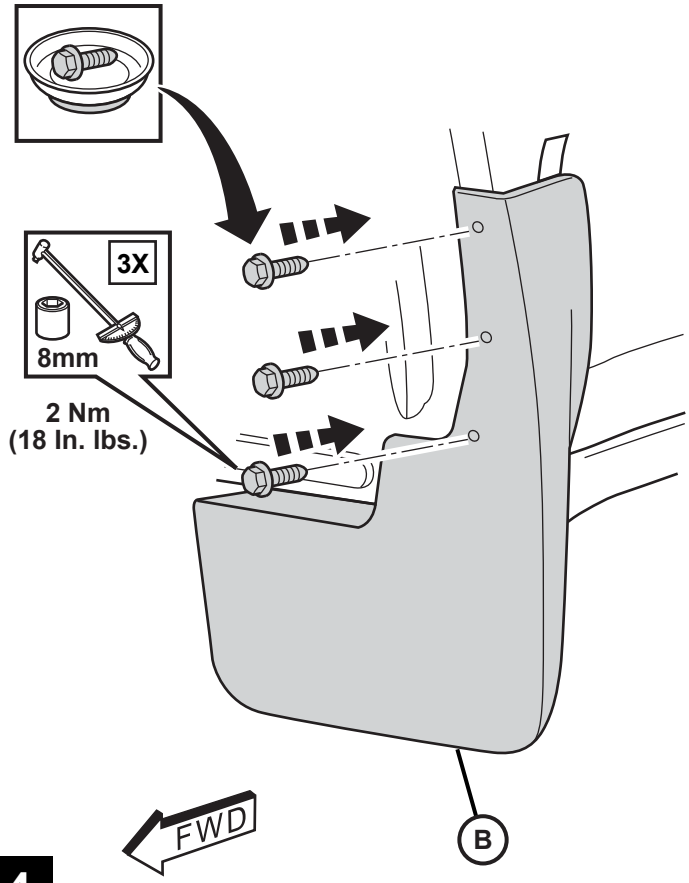

4

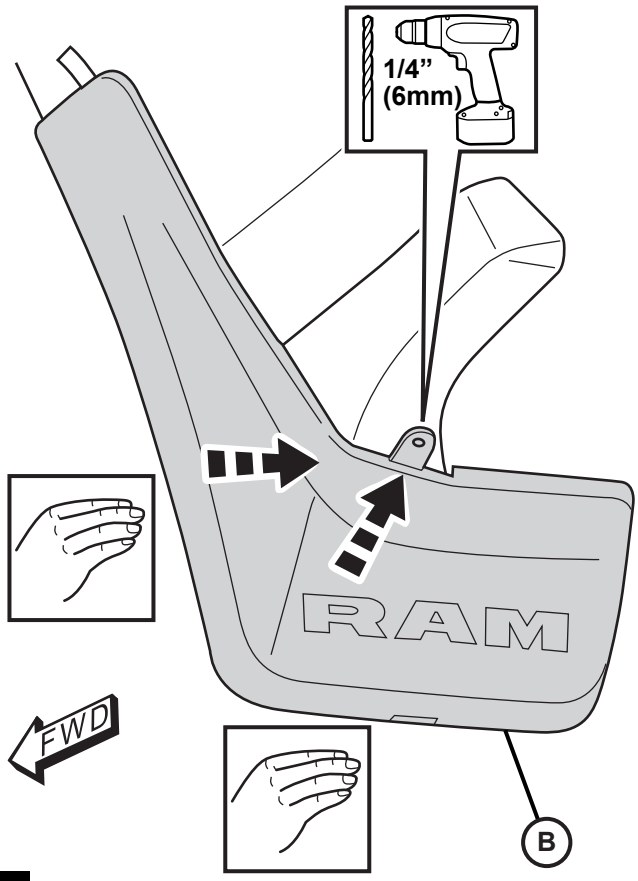

5

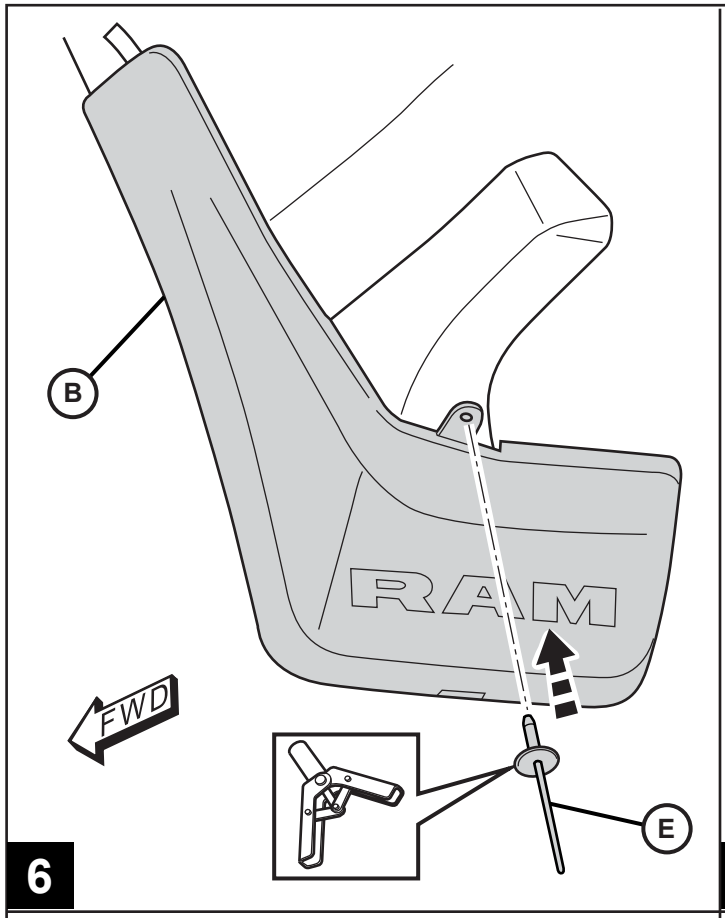
B
RAM
FWD
E
6

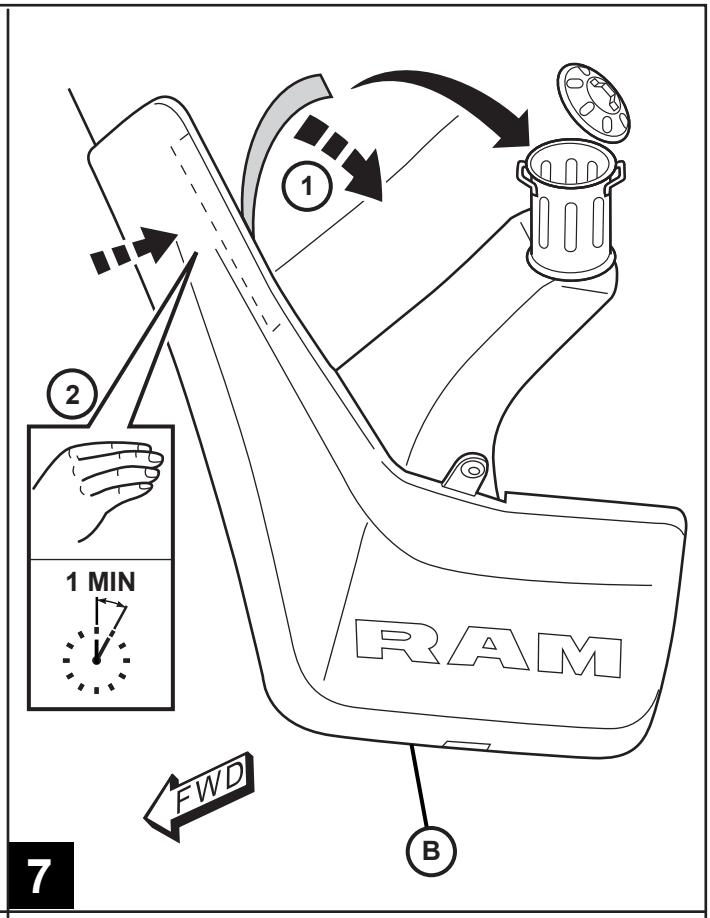
1
2
1 MIN
RAM
FWD
B
7

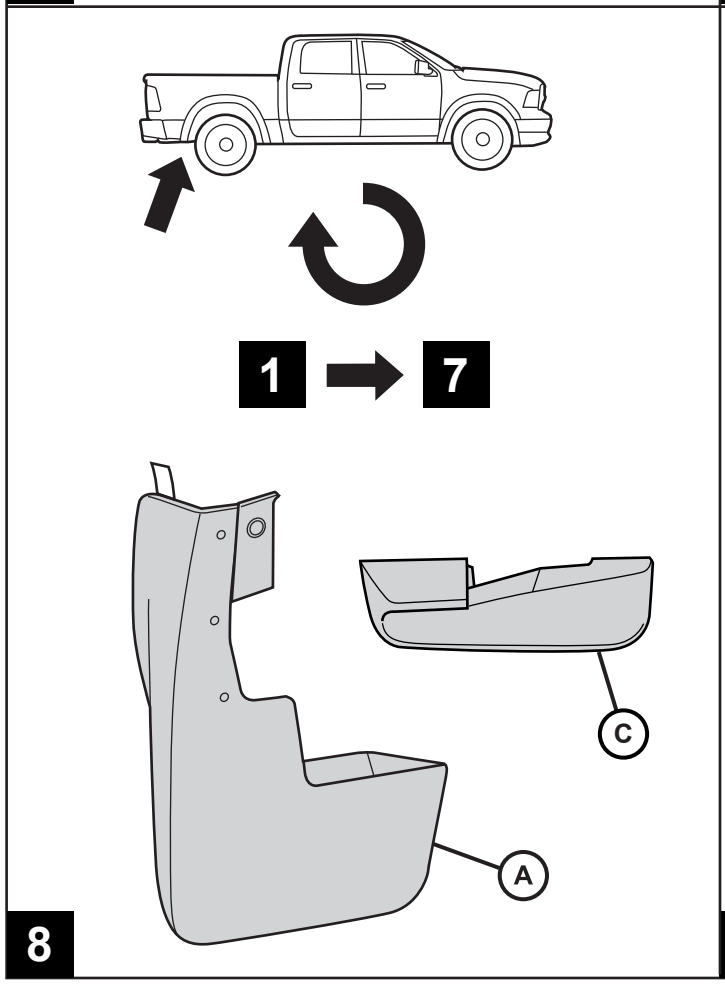
1
7
C
A
8

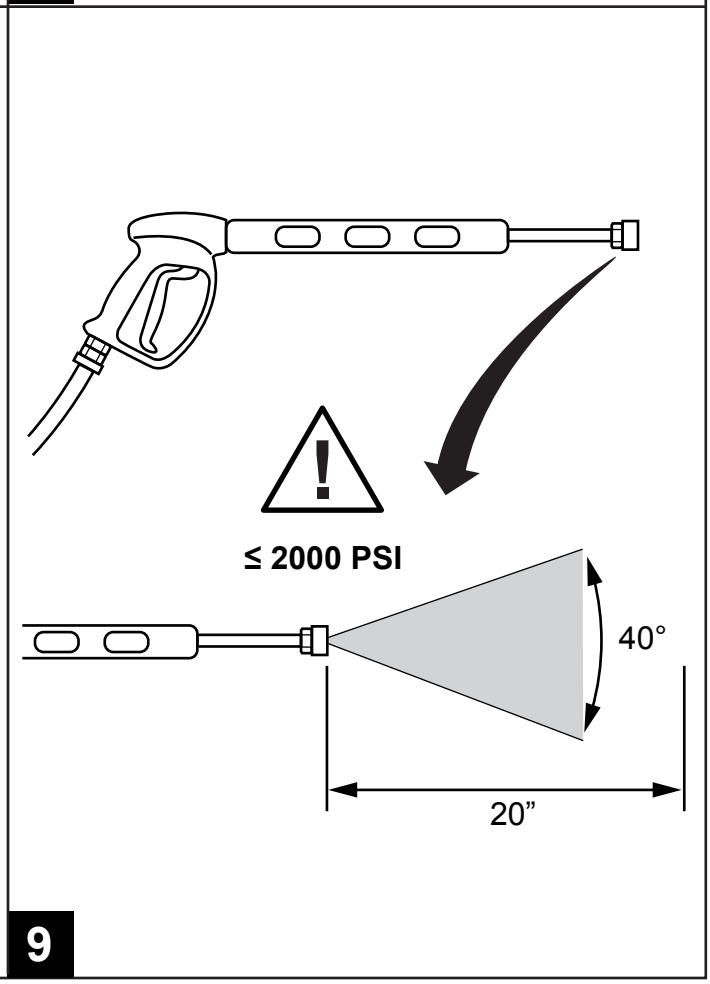
≤ 2000 PSI
40°
20”
9